JETBOIL FLASH COOKING SYSTEM

FLASH-TOM
FLASH-CAMO
FLASH-GRN
FLASH-CBL
FLSHJAVA
FLSHPRES-TOM

(EN) Instructions for use
(FR) Directives d'utilisation
(DE) Gebrauchsanleitung
(ES) Instrucciones de uso
(IT) Istruzioni per l'uso
(NL) Gebruiksaanwijzingen
(DA) Instruktioner for brug
(FI) Käyttöohjeet

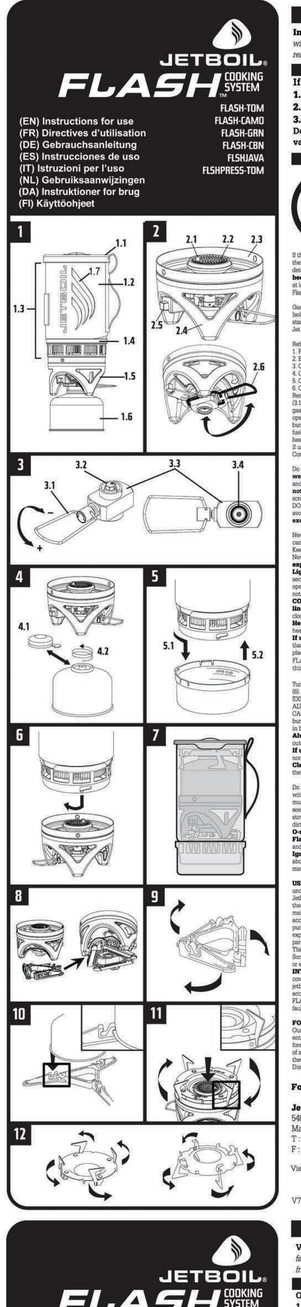

(EN) ENGLISH

Important: *Read these instructions for use carefully. Familiarize yourself with the appliance before connecting it to its gas container. Keep these reference* **USE OUTDOORS ONLY**

FOR YOUR SAFETY

If you smell gas:
1. Do not attempt to light appliance.
2. Extinguish any open flame.
3. Disconnect from fuel supply.
4. Do not store or use gasoline or any other liquids with flammable vapors in the vicinity of this or any other appliance.

CARBON MONOXIDE HAZARD

DANGER
This appliance can produce carbon monoxide which has no odor.
Using it in an enclosed space can kill you.
Never use this appliance in an enclosed space such as a camper, tent, car, or home.

If there is a leak on your appliance (smell of gas), remove it to a well-ventilated, flame-free location where the leak may be detected and stopped. Check for leaks on your gas connection with soapy water solution. Do not use if leak is detected. Leaks can scape wave. ONLY USE IN WELL VENTILATED AREA **Accessible parts may become very hot. Keep young children away.** FLASH must be operated on a horizontal surface, at least 3m away from any combustible material. Do not move, tip, lift, or FLASH while burner is lit. Flaring may occur.

SPECIFICATIONS
Gas consumption: Butane under vapor pressure. Use only with 100g/200g/450g Jetboil Jetpower isobutane/Propane Gas Cartridges (sold separately). Canister must conform to the EN417 or AS2229 standard. It may be hazardous to attempt to fit other types of gas connections.
Gas input: 0.21 mm Consumption of gas: 65 g/hr (0.9 kW) (0.9 kW) (0.9 kW)